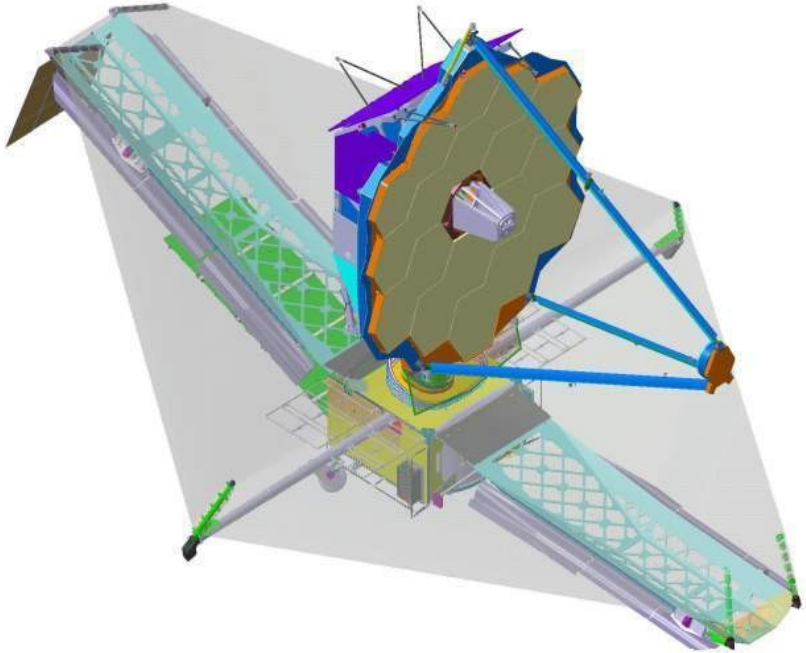

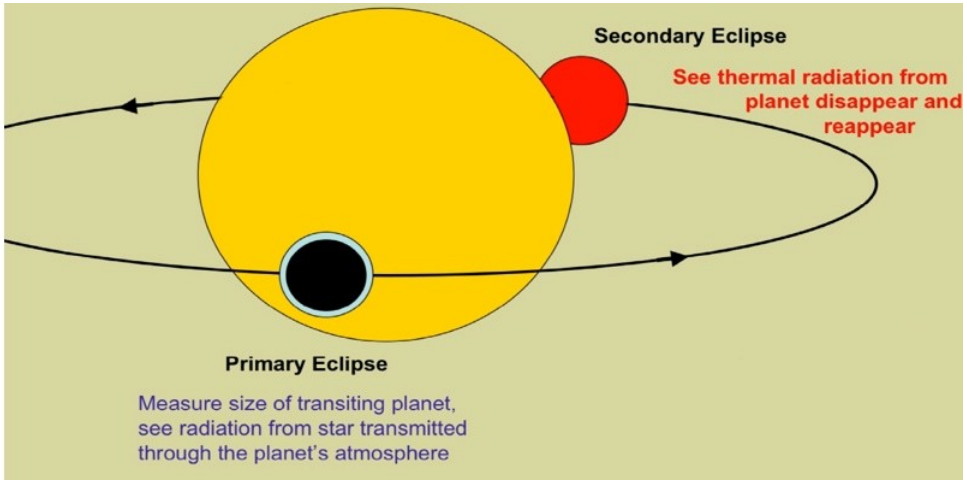


# Observing Transiting Exoplanets with the James Webb Space Telescope

T. Greene, NASA Ames Research Center

(collaboration with T. Barman, C. Beichman, M. Clampin, D. Deming, M. Marley, & JWST SWG transit group)

21 April 2009

# Transiting Exoplanet Observations

- Most of the 340+ known exoplanets have been discovered via radial velocity (RV) observations
  - RV measures v sin i --> M sin i, Period, orbital distance (a)
- Transits nail inclination ( i~90º) and give planetary size
  - Transits + RV --> M, P, a, R, $\rho$
- Transits provide the best opportunity for characterization
  - ***Absorption spectroscopy*** of planetary limbs during transits (e.g. Na & $H_2O$ spectra of HD 209458b; Charbonneau 02; Barman 07)
  - ***Secondary Eclipse*** differential photometry (TrES-1…) and spectroscopy (HD 209458b, HD 189733b) yield direct detection of exoplanet photons (holy grail?)
  - ***Light curves*** yield flux maps of exoplanet surfaces (e.g., Knutson et al. 2007: HD 189733b)

# Transit & Eclipse Geometries

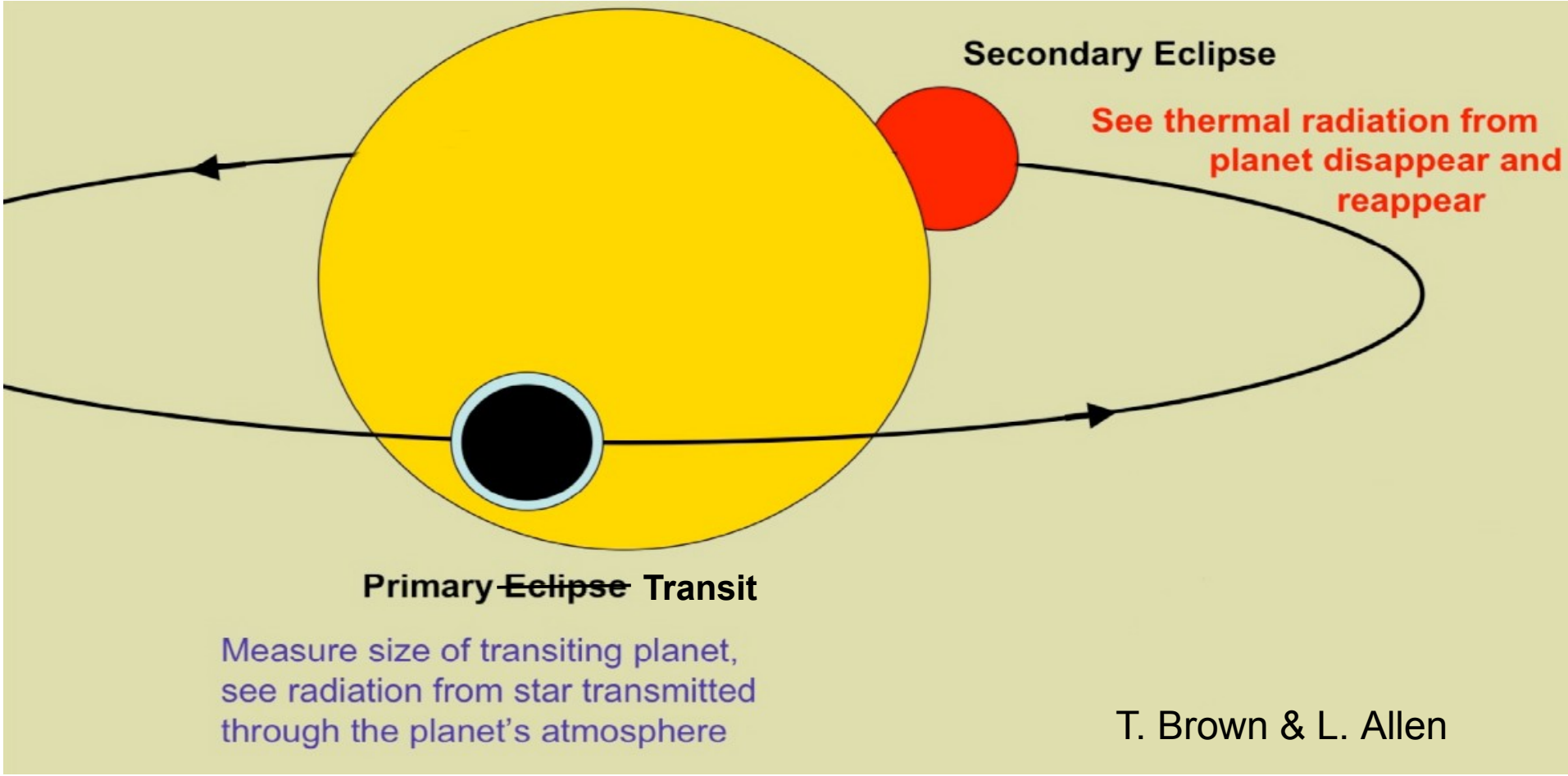

# Exoplanet transit observations 2008/9

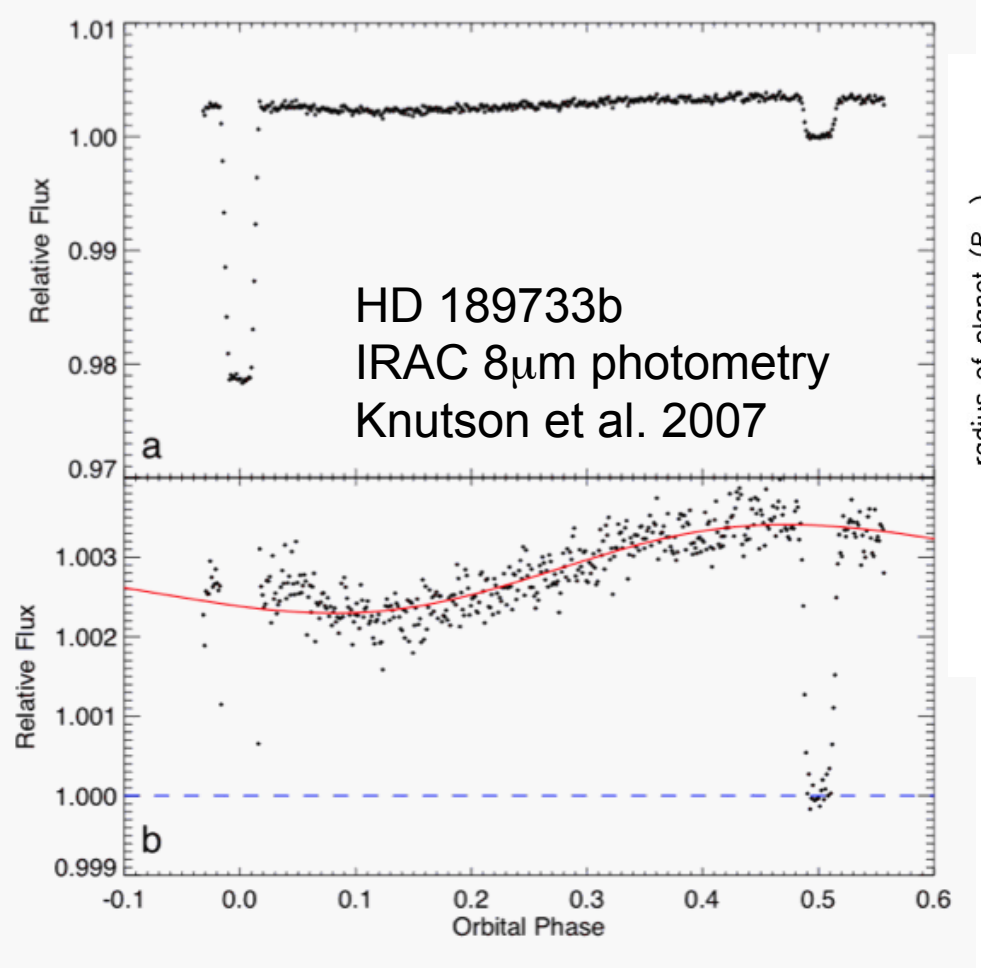


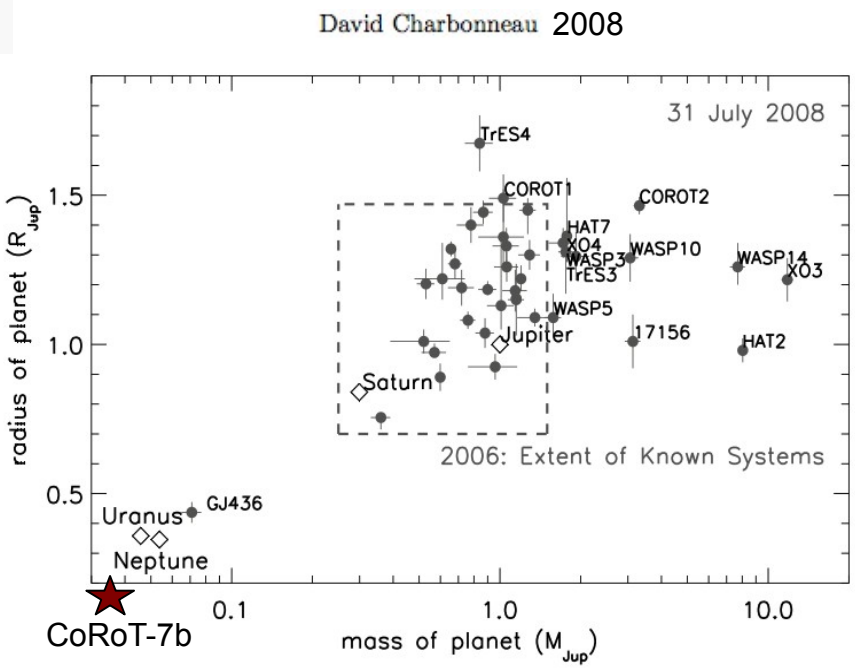


- Over 50 exoplanets characterized via both transits and RV (only 11 in 2007); numerous Spitzer secondary eclipse observations)
- About half are ~ Jovian mass & size

# NICMOS grism observations of HD 189733b

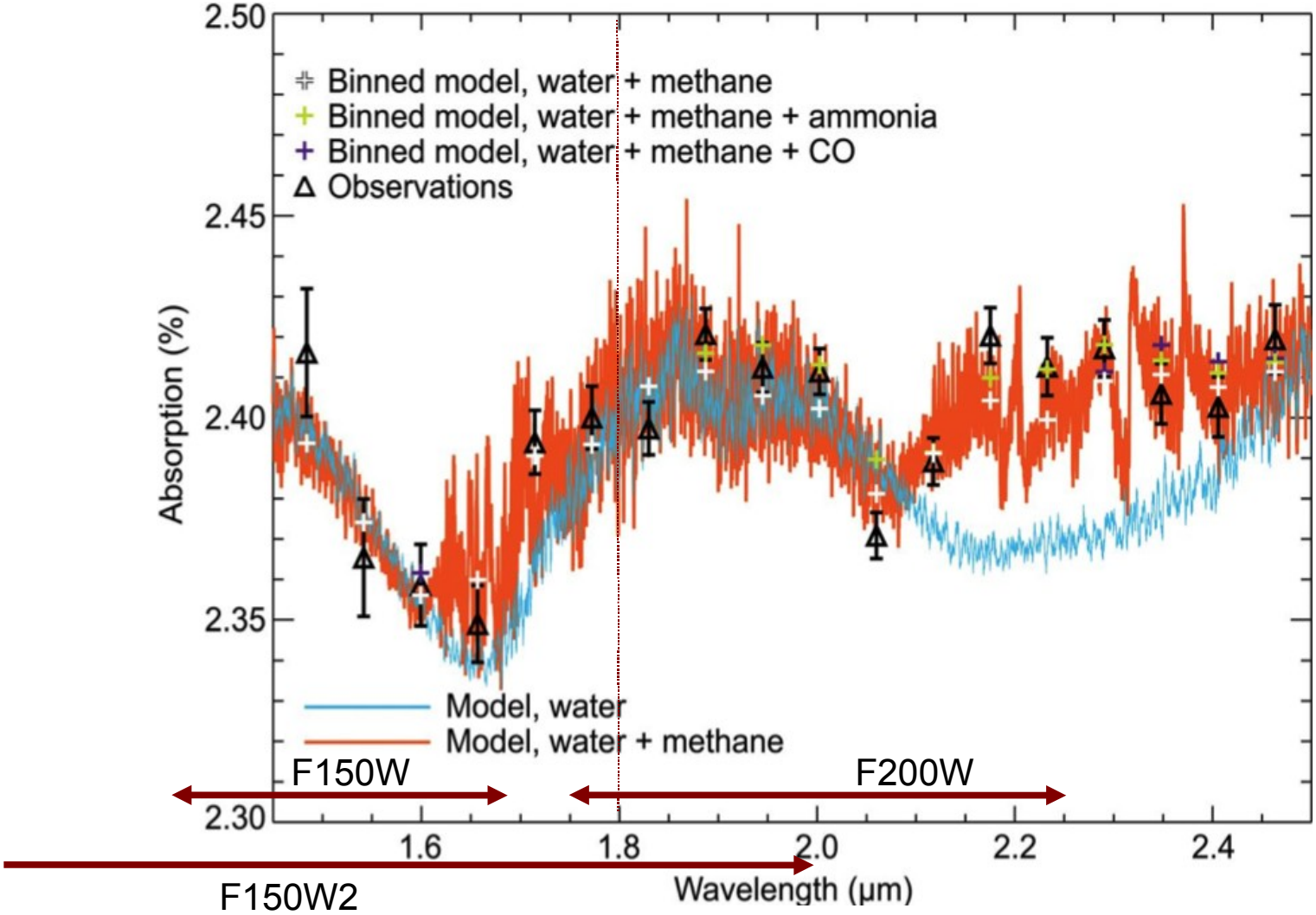


Swain et al. 2008

# Exoplanet Landscape in 2013 – JWST Launch

- Likely over 750 RV exoplanets known
  - HARPS-N, APF, IR RV(?), other facilities online
  - Maybe some ~1$M_{Earth}$ planets around M dwarfs (~1-4 m/s; IR)
  - Perhaps >100 bright transiting planets with RV
- Spitzer warm IRAC & HST (WFC3 / STIS?) will have observed all bright transiting planets (broadband) as of 2010
- Kepler & Corot surveys complete: planet number & size statistics
  - Perhaps > 1000 new exoplanets over 100 sq deq FOV; most 12 < V < 15 (Johnson mags), short period, gas giants
- Earths in habitable zones around M dwarfs may be discovered by ground-based transit surveys (e.g., Charbonneau Mearth)
- Many transiting planets around bright stars (accessible via RV) could be found if a small dedicated space mission has flown (e.g., TESS)
    - Ground-based searches limited to ~0.5% depths and short periods
- Some information about exozodiacal dust from Keck & LBT-I
  - Numerous large planets imaged from ground (GPI)

# JWST in a nutshell

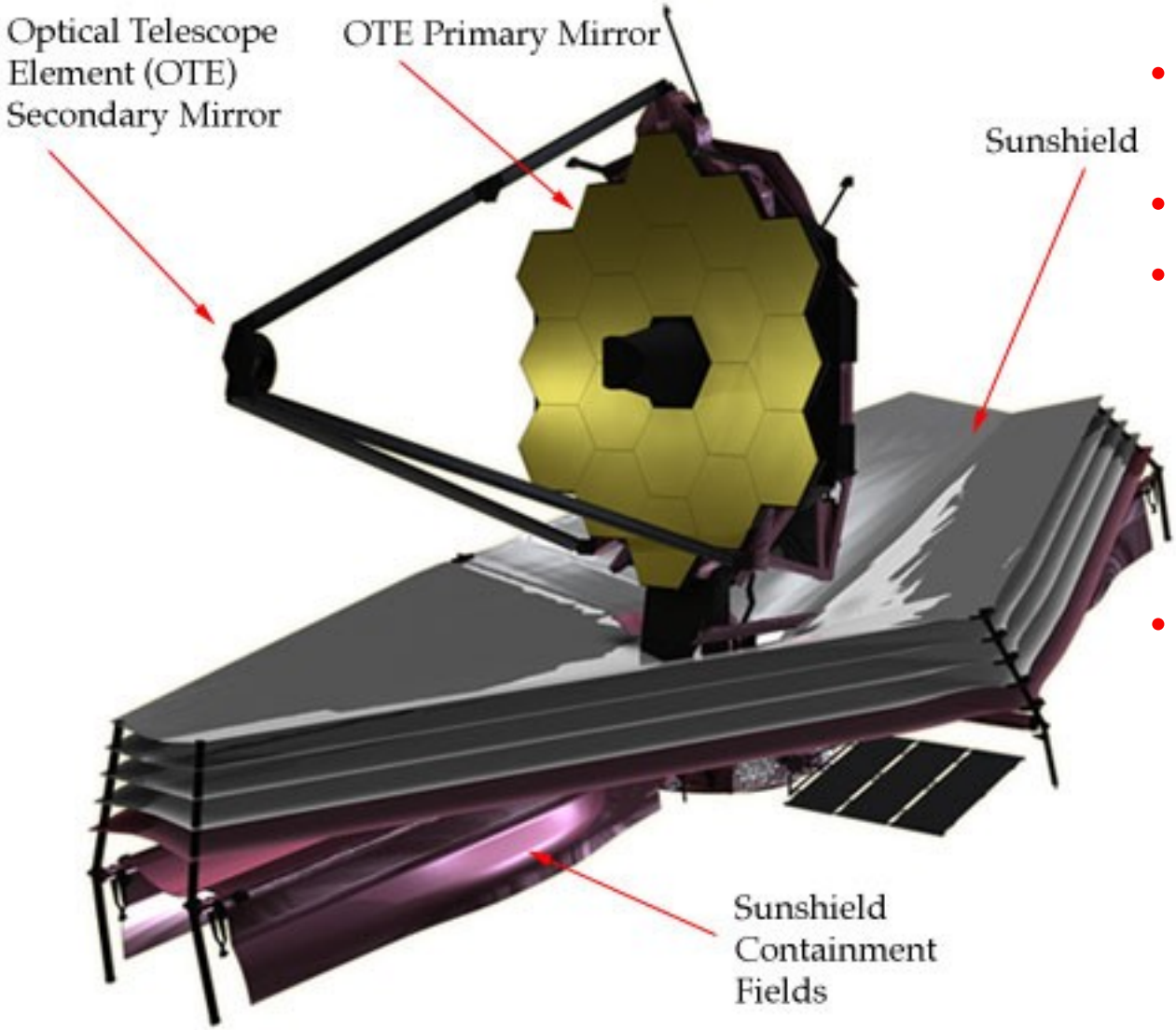


- 6.5-m primary mirror; 18 segments
- $\lambda$ ~1 - 28 $\mu$m
- Instruments:
  - NIRCam
  - NIRSpec
  - MIRI (cam + spec)
  - FGS w/TF
- ≥ 2013 launch
  - Arianne V to L2
  - 5 yr req life
  - 10 yr goal
  - No cryogens

# JWST Transit Capabilities (1)

- ***How much better will JWST be than Spitzer or Hubble that are producing such great results today?***
  - Two major improvements
- Larger aperture has more area (25 vs 0.5 m^2) for collecting light - about 7x the effective diameter of Spitzer:
  - S/N should be 7x more than Spiter in same time
  - 50 x less integration time for Spitzer S/N
- We are still modifying the instruments to optimize them for transit observations!
  - Better near- and mid-IR capabilities overall
  - Reduce / eliminate slit losses in spectrographs
  - Studying spect. precision limits (Clampin, Deming, Lindler)
  - Optimize operation & calibration strategies (precision, bright limits)

# JWST Transit Capabilities: Instruments (2)

- **NIRCam:** 1 – 5 μm images & some spectra
  - Images over 0.7 – 5 μm Nyquist sampled at 2 and 4 μm
  - R ~ 1700 spectra 3 – 5 μm (not continuous)
  - K ~ 5 - 8 bright limit via subarrays, weak lenses, spectra
- **NIRSpec:** 1 – 5 μm spectra
  - R=100 (1 setting) and R=2700 (3 settings) spectroscopy with coarse (100 mas) spatial sampling for single or multiple objects
  - Implementing a very wide slit (1.6 arcsec) to eliminate slit modulation
- **MIRI:** 5 – 28 μm images & spectra
  - 5 – 28 μm Imager Nyquist sampled at 7 μm
  - Low Res Spectrograph R~100 $\lambda$ = 5 – 10 (14) μm
  - Med Res R=3000 Integral Field image slicer spectrograph
- **Fine Guidance Sensor** Tunable Filter (FGS TFI)
  - 1 – 5 μm images
  - Has a coronagraph; using masks alone reduces diffraction

# Simulated JWST Spectra

- Simulate the transit of a model exoplanet across the disk of a model star at each wavelength:
  - Use semi-realistic JWST instrument parameters
  - Add photon noise, keep SNR < systematic limit (~2E-5; Deming et al. 2009)
  - Use Kurucz star models and Fortney (trans), Barman planet models
- Do for:
  - HD 189733 b : (transmission and sec. eclipse)
    - K1.5 V @ 19.3 pc, V = 7.7 mag
    - M = 1.13 Mjup, R = 1.14 Rjup
    - T ~ 1000 - 1200 K (Knutson et al. 2007)
  - GJ 436 b: (transmission)
    - M2.5 V @ 10.2 pc, V = 10.7 mag
    - M = 0.07 Mjup, R = 0.44 Rjup
    - T ~ 712 K (Deming et al. 2007)

# HD 189733b should be great!

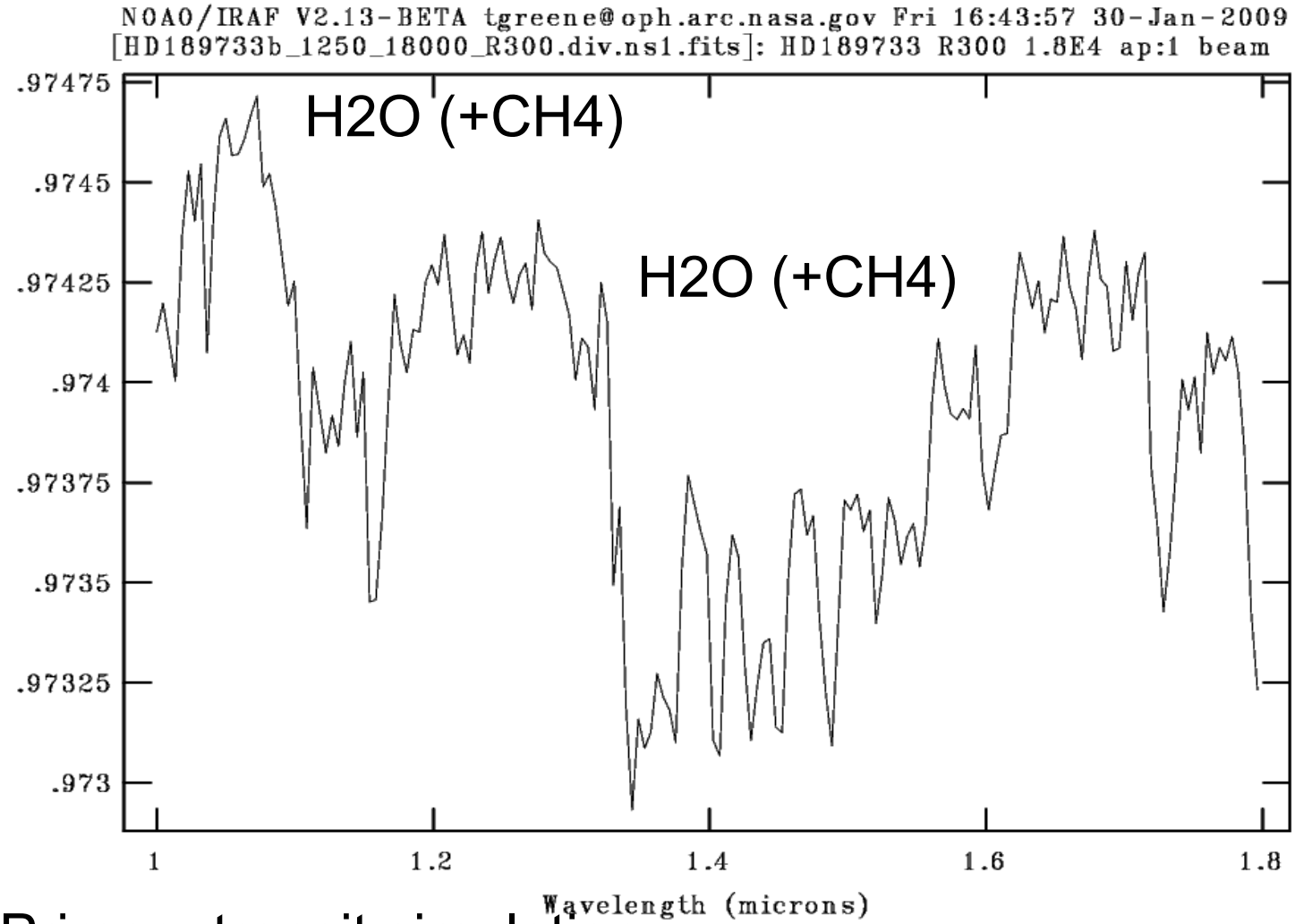


- Primary transit simulation
- Using T=1250K model from J. Fortney (10 hr )

# GJ 436b will be tough! (small & cold)

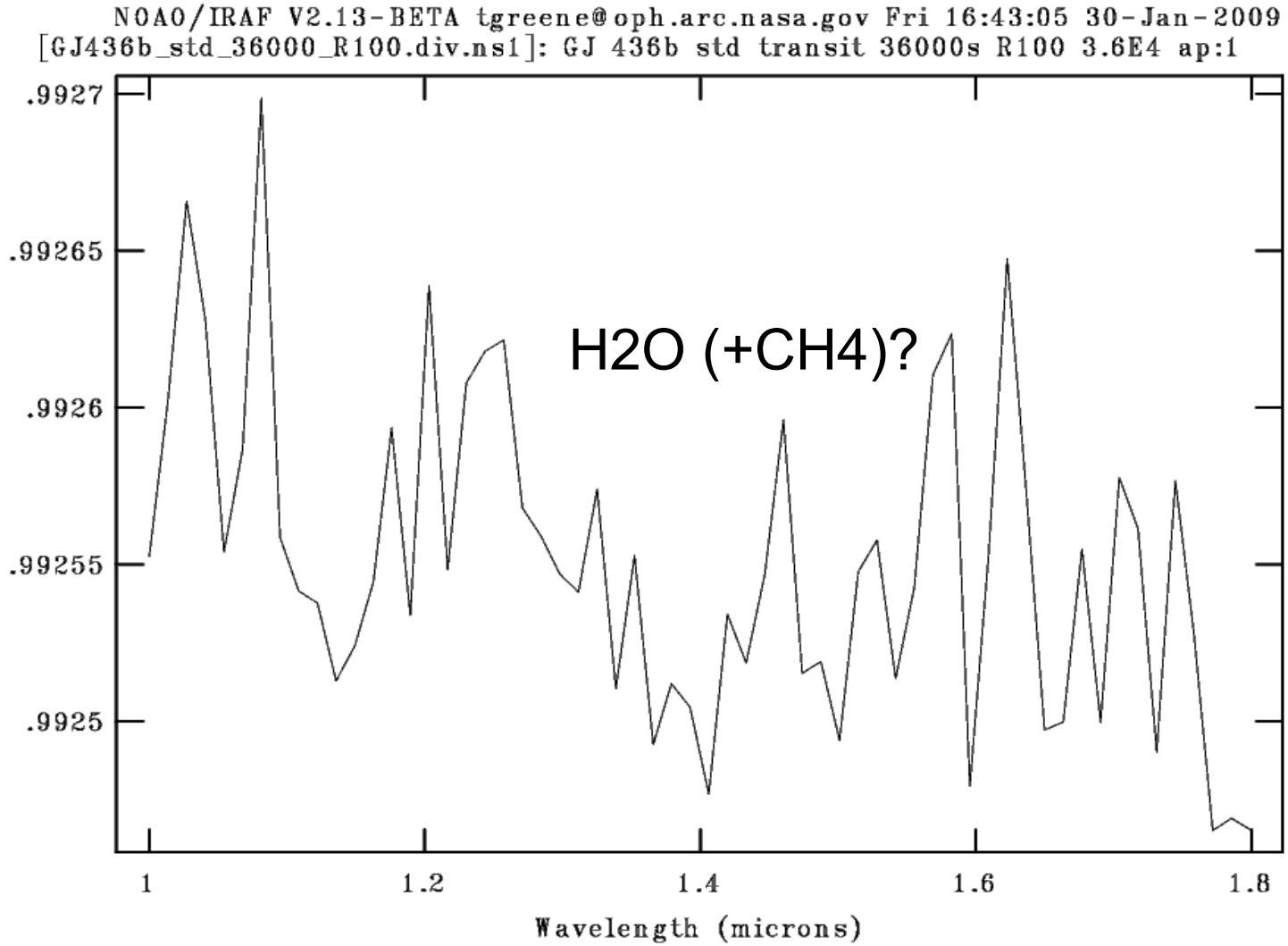


– Transit simulation using J. Fortney 1X solar model (20 hr)

# HD 189733b nIR Sec. Eclipse

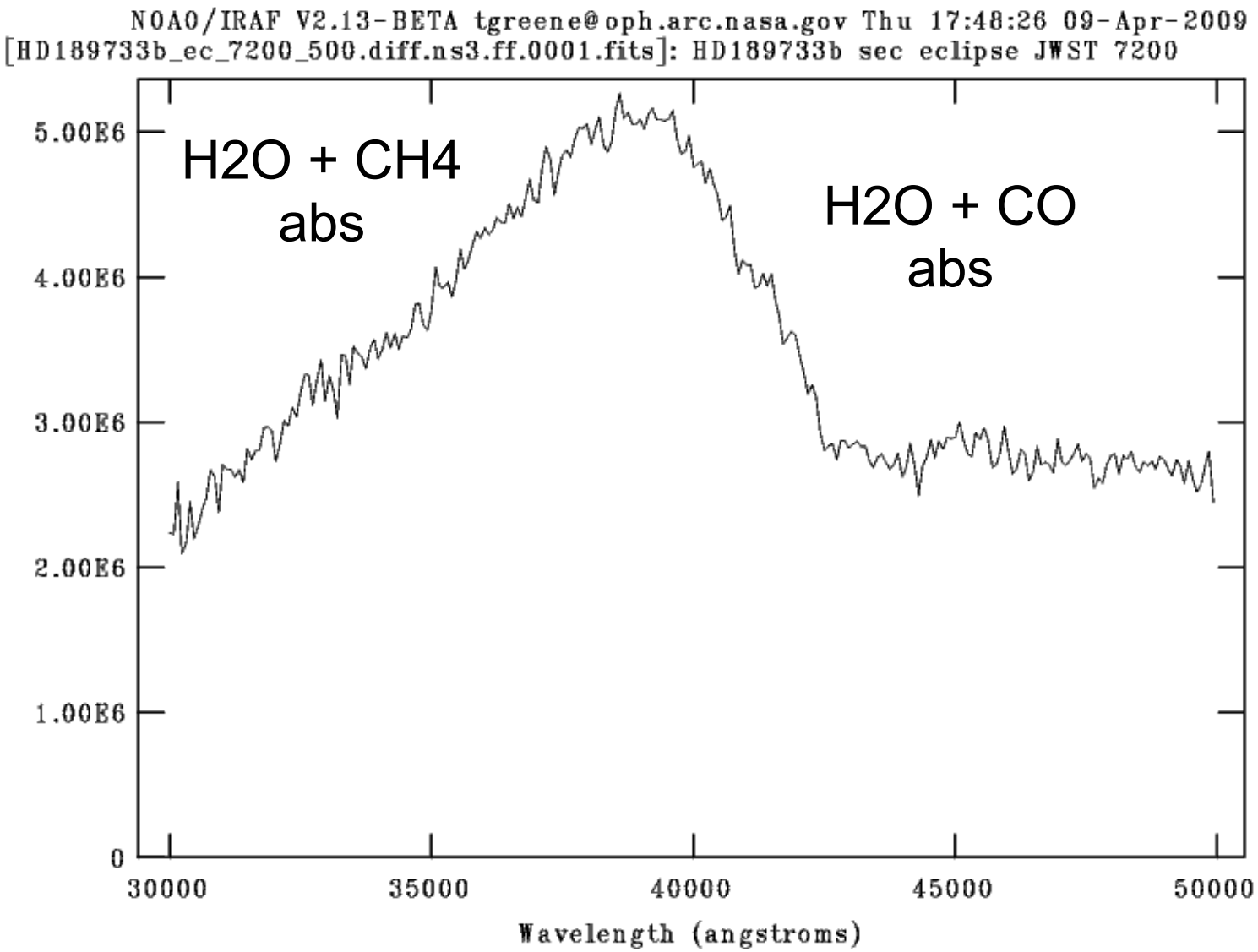

# MIRI detection of CO abs. in SuperEartrhs

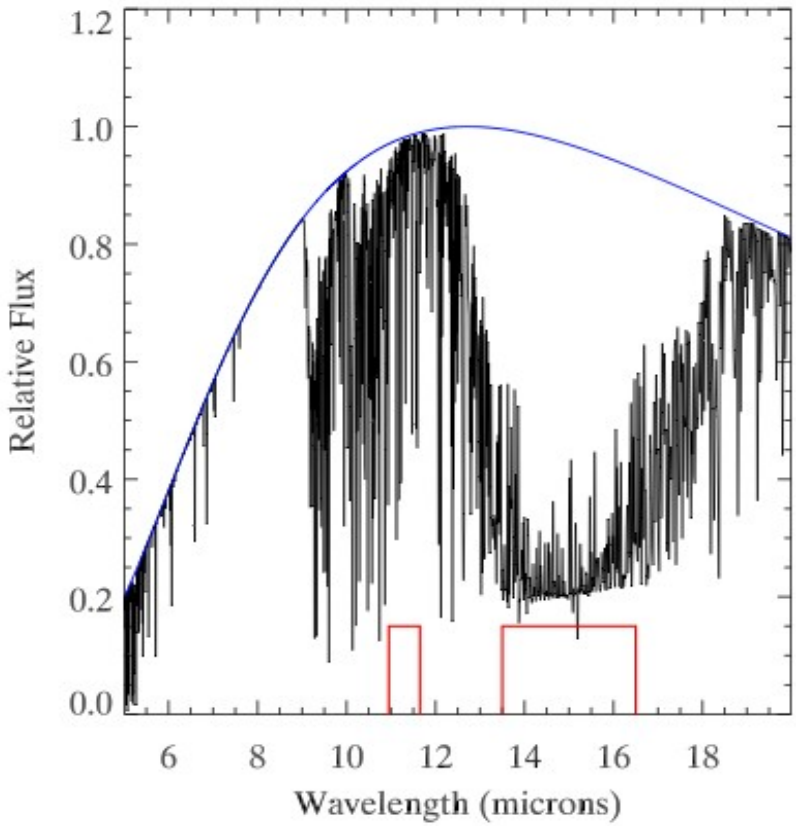


Deming et al. (2009) showing Miller-Ricci Super_Earth and MIRI filters

- JWST MIRI filters (red boxes, left) can be used to detect deep CO2 absorption in Super-Earth atmospheres (Miller-Ricci model, left)
- Modeling shows that modest S/N detections possible on several TESS-discovered planets (Deming et al. 2009).

# MIRI Sec. Eclipse Sensitivity Examples

**Table 1: Exoplanets 0.1 AU from a G2V star at 15 pc distance**

| Planet | F1000W R=5 | F2100W R=4 | LRS@10 μm R=30 |
|---|---|---|---|
| 1 $R_{Jup}$ Itime (hr) S/N=30 | 0.1 | 0.1 | 1 |
| 1 $R_{Jup}$ contrast | 8E-4 | 1.5E-3 | 8E-4 |
| 2 $R_{\oplus}$ Itime (hr) S/N=5 | 3 | 4 | 19 |
| 2 $R_{\oplus}$ contrast | 2.7E-5 | 5E-5 | 2.7E-5 |

**Table 2: Exoplanets 0.05 AU from a M5V star at 10 pc distance**

| Planet | F1000W R=5 | F2100W R=4 | LRS@10 μm R=30 |
|---|---|---|---|
| 1 $R_{Jup}$ Itime (hr) S/N=30 | 4.6 | 0.4 | 36 |
| 1 $R_{Jup}$ contrast | 3E-4 | 2E-3 | 3E-4 |
| 2 $R_{\oplus}$ Itime (hr) S/N=5 | 118 | 11 | 925 |
| 2 $R_{\oplus}$ contrast | 1E-5 | 7E-5 | 1E-5 |

- Planets 0.1 AU from G2 star have 12 day periods and T ~ 890 K
- Planets 0.05 AU from M5 star have 9 day periods and T ~ 290 K
- Integration times are lower limits for secondary eclipse observations – no systematic noise or overheads included

# Spitzer / JWST views of HD 189733b

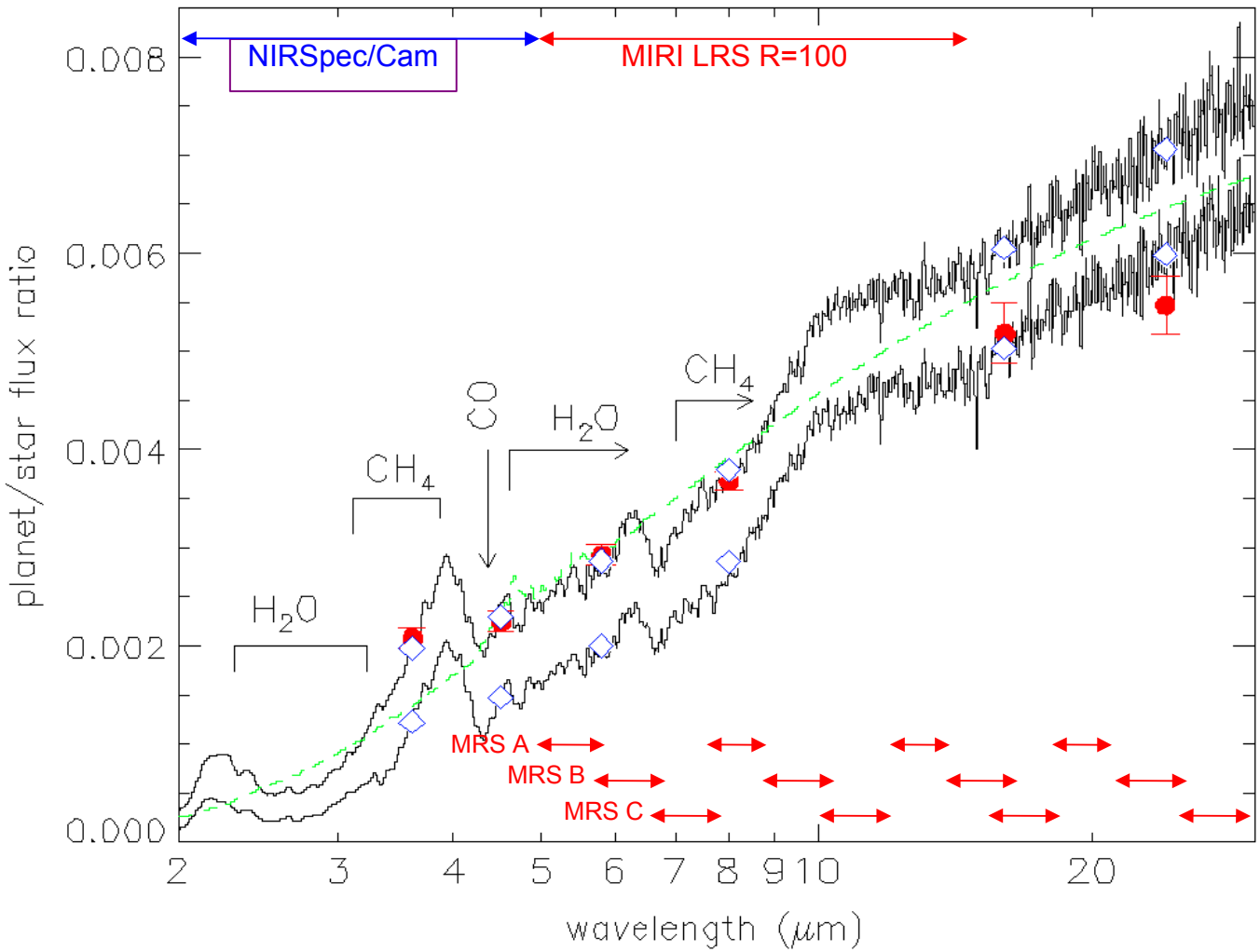


CH4, CO, H2O constrain temperature and C abundance

Red symbols are measurements;

Top curve has flux absorbed on day side only; bottom has uniform energy redistribution

Dashed line is BB

Charbonneau, Knutson, Barman, Allen, Mayor, Megeath, Queloz, & Udry (2008)

# JWST Transit Summary

- JWST will *characterize hot giant planets* with high S/N and at R=100 – 500 spectral resolution with near-IR and mid-IR transit and secondary eclipse observations
  - Planet features detectable in a single transit @ R=500!
- JWST will be able to *detect small (Earth) planets* when transiting bright GKM stars in near/mid-IR imaging observations
- Thermal emission from super-Earth transiting planets in habitable zones of M stars *can be detected* in a few transits in a broad-band 20 $\mu$m filter
- Characterization of some small planet atmsopheres possible
  - Exotic Super Earths (low gravity, H dominated atmospheres) possible!
  - Atmospheres of strict Earth analogs cannot be characterized
  - Stars produce too much photon noise

# The End